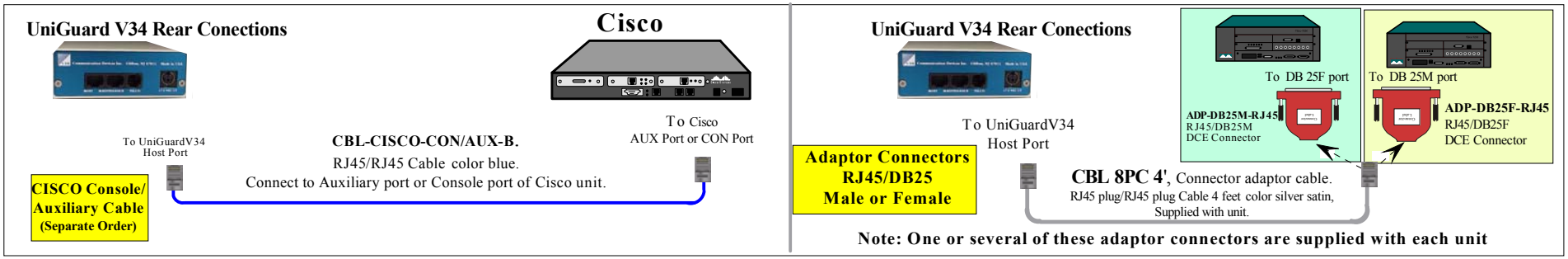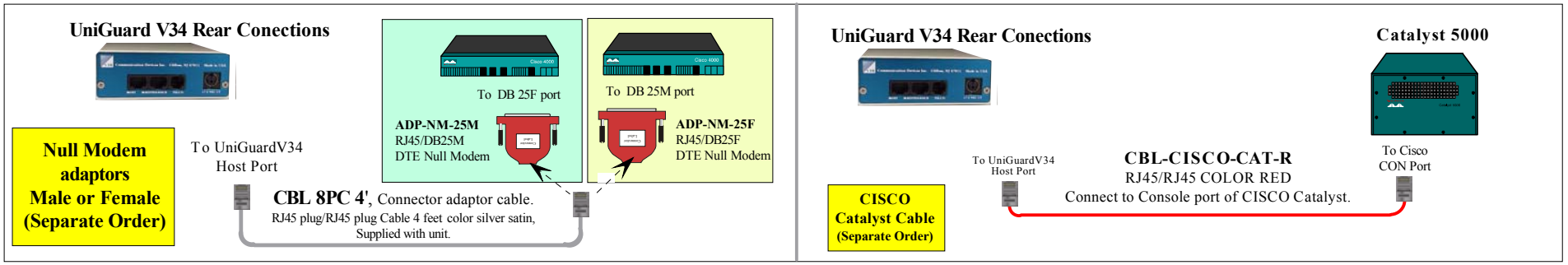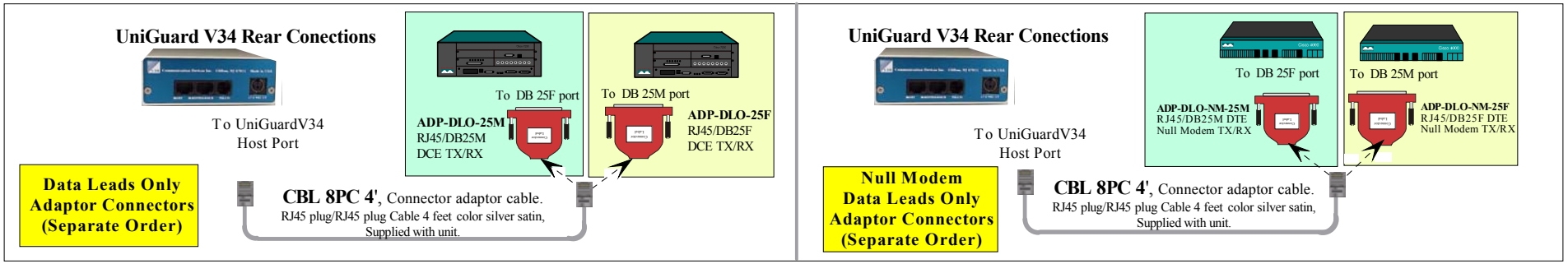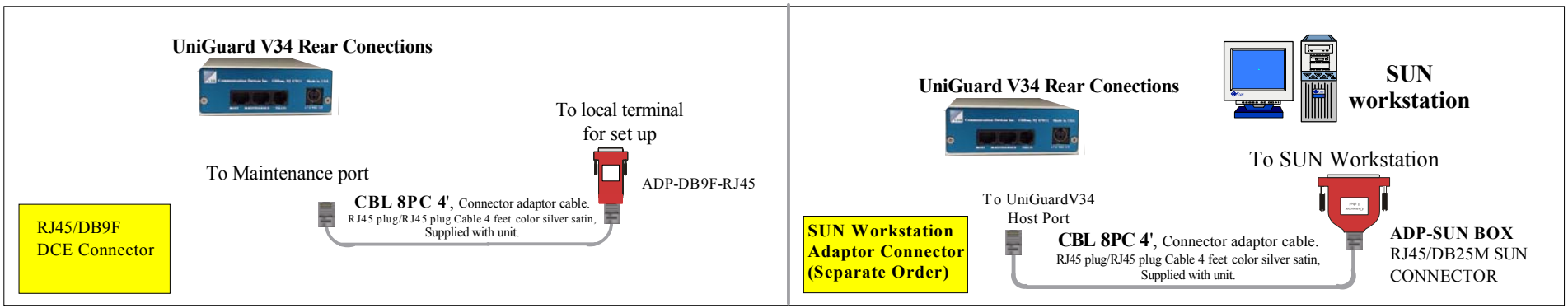Application Specific Cables